1 Features

- Field-Oriented-Control for brushless motors
- Maximum input voltage of 150 V, 420 A continuous current and 660 A pulsed current with adequate cooling
- Supports a multitude of control modes including current, duty cycle, speed and position control
- Open-Source firmware/scripting supports coding of custom applications that can run on the onboard STM32F405 MCU
- Per-phase phase shunts and amplifiers with careful signal processing for precise phase current measurements
- Configurable sensor input ports compatible with hall sensors, ABI encoders, and some SPI based magnetic encoders
- Broad range of communication interfaces including USB, Bluetooth, Wi-Fi, CAN, SPI, I2C, UART, PWM, and ADC inputs
- Integrated IMU with 3-Axis Accelerometer and 3-axis Gyroscope
- Integrated temperature sensors automatically protect the system during high power draw by smoothly ramping down the current
- Easy setup with VESC TOOL Desktop and Phone applications for fast integration alongside the possibility for deep customization
- Integrated ESP32-C3 supports both station and access-point Wi-Fi connections alongside BLE 5 while allowing large custom scripts to run
- Integrated 512 MB memory chip supports general purpose use from scripts, data-logging
- Switched and protected 12V 5A switchable outputs for driving external peripherals
- Fully potted to protect against moisture and dust

Figure 1: VESC Maxim+

2 Description

The VESC Maxim+ is a feature-rich brushless motor controller which can provide up to 50 kW of continuous power when cooled appropriately. An on-board STM32F405 micro-controller running open-source VESC software enables precise motor control alongside configurable custom applications and scripting. It's breadth of external communication interfaces and auxiliary power output enables easy integration with many different systems and peripherals. It supports both sensorless and sensored brushless motor applications with full sinusoidal Field-Oriented-Control enabling quiet, efficient, and powerful motor dynamics. It also supports other advanced control techniques including overmodulation and field weakening for maximizing power and speed in certain applications, and high frequency injection for smooth sensorless control at and from zero speed.

Contents

1 Features **1**

2 Description **1**

3 Specifications **3**
3.1 Absolute Maximum Ratings . . . 3
3.2 Typical Operating Characteristics . . . 3
3.3 Recommended Operating Conditions . . . 3
3.4 Physical Properties . . . 3

4 Pinout and Wiring **4**
4.1 Pin Descriptions . . . 4
4.2 Wiring Diagram . . . 8
4.3 LispBM Extensions . . . 9

5 Device Installation **10**
5.1 Installation Warnings . . . 10
5.2 Mechanical Dimensions . . . 11

6 Configuring the Device **12**
6.1 Configuration Warnings . . . 12
6.2 Connecting the Controller to VESC Tool . . . 12
6.3 Using the Motor Setup Wizard . . . 12
6.4 Configuring Motor Current . . . 13
6.5 Configuring Battery Current . . . 13
6.6 Configuring Inputs . . . 14

7 Product Warranty **15**
7.1 Warranty Coverage . . . 15

8 Compliance & Regulatory Information **16**
8.1 CE Marking . . . 16
8.2 UKCA Marking . . . 16
8.3 WEEE Directive (2012/19/EU) . . . 16

3 Specifications

3.1 Absolute Maximum Ratings

Parameter	Min	Typ	Max	Unit
Input Voltage	25	135	150[1]	V
Battery Series (Li-Ion)	6		32	S
Input Current[2]		420	660	A
Continuous Motor Current[3]		420		A
Pulsed Motor Current[3]			660[4]	A
PWM Switching Frequency		30	50	kHz
5V Auxiliary Current			2	A
3.3V Auxiliary Current			0.3	A
12V Auxiliary Current[5]		5	8[6]	A
Servo ppm input	2		5.5	V
ADC inputs	0		5.5	V

3.2 Typical Operating Characteristics

Parameter	Typ.	Max	Unit
12V Bus Voltage	11.5	12.5	V
Sleep Input Current (100V Input)	10	40	uA
Awake resting Input Current (100V Input)	5	30	mA

3.3 Recommended Operating Conditions

Parameter	Min	Max	Unit
Operating Temperature	-40	85	°C
Humidity		Non-condensing	-

3.4 Physical Properties

Parameter	Value	Unit
Length	183	mm
Width	132	mm
Height	37	mm
Mass	1120	g

[1] Spikes may not exceed this, some margin should be accounted for. When using li-ion cells that charge up to 4.2V per cell at most 32 cells in series are recommended.

[2] The input current listed refers to the total current running through the power input connector of the ESC. Note that in the VESC Tool settings the total input current will be the sum of each individual motors set input current, so for balanced power delivery to both motors one half of this total current should be set for each motor.

[3] The motor current listed is referring to the absolute current in the Dq frame of the motor and thus is related to the peak amplitude current any one motor phase wire will experience. A stalled motor running against the current limit can experience the peak current continuously if it happens to stall when aligned directly with a given phase.

[4] 10 - 30 seconds depending on starting temperature and external cooling. The full potential of the device can typically only be reached when using a liquid cooling block.

[5] Combined current on all 12V output pins. The pins have individual ratings.

[6] Short duration only. Depends on device temperature.

4 Pinout and Wiring

4.1 Pin Descriptions

The VESC Maxim+ has a waterproof 39-pin automotive connector where most pins have several functions. A diagram of the connector is shown in Figure 2, the pin functions are described in Table 2 and the relevant part of the schematic on how the pins are connected, protected and driven by the STM32 and ESP32 is shown in Figure 3.

Note that many of the pins have labels such as Indicator L, Brake Light etc. This is just a convention used by VESC Packages; the pins are general purpose and can be fully controlled using LispBM-scripting.

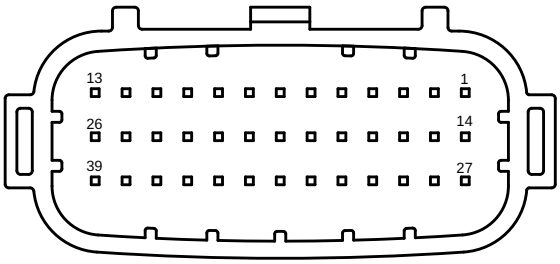

13 Hazard Input IOEXP P10 3.3V Max 12V Pull 2	12 Indicator L Input IOEXP P02 3.3V Max 12V Pull 1	11 Indicator R Input IOEXP P03 3.3V Max 12V Pull 1	10 GND	9 Throttle STM ADC1 0 - 5V	8 HALL 1 RX ADC3 0 - 5V STM 470R Series	7 Temp Motor STM 0 - 3.3V	6 SW HV STM AUX2 LowSide BAT	5 CANL	4 CANH	3 GND	2 SWDIO ADC5 STM	1 SWCLK STM
26 Sidestand Input IOEXP P07 3.3V Max 12V Pull 2	25 Cruise Input IOEXP P12 3.3V Max 12V Pull 2	24 Neutral Input IOEXP P13 3.3V Max 12V Pull 1	23 GND	22 Brake STM ADC2 0 - 5V	21 HALL 2 TX ADC4 0 - 5V STM 470R Series	20 +5V	19 Indicator L SW 2 Out: ESP IO1 In: IOEXP P01 12V 2A	18 SW 1 Out: ESP IO0 In: IOEXP P00 12V 2A	17 +12VA STM AUX1 4A	16 GND	15 D- ESP	14 D+ ESP
39 High Beam Input IOEXP P04 3.3V Max 12V Pull 1	38 Mode Input IOEXP P15 3.3V Max 12V Pull 2	37 Reverse Input IOEXP P16 3.3V Max 12V Pull 2	36 GND	35 PPM/Servo STM 3.3V 220R Series	34 HALL 3 STM 5V 470R Series	33 +5V	32 Brake Light SW 4 Input/Output Out: ESP IO3 In: IOEXP P06 12V 2A	31 Indicator R SW 3 Out: ESP IO2 In: IOEXP P05 12V 2A	30 +12VA STM AUX1 4A	29 +BATT 4A	28 EN PWR SW	27 IO9 ESP

Figure 2: The 39-pin connector on the Maxim+

Pin	Name	Function	Limits	CPU	CPU Pin
1[1]	SWCLK	SWD	3.3V 20 mA	STM	PA14
2[1]	SWDIO ADC5	SWD Analog	3.3V 20 mA 0V - 3.3V	STM STM	PA13 ADC5
3	GND	Ground	3A	-	-
4	CANH	Isolated CAN	2500V[2]	Both	-
5	CANL	Isolated CAN	2500V[2]	Both	-
6[3]	SW HV	Switch LowSide	VBAT 2A	STM	AUX2
7	Temp Motor	Temp Sensor	3.3V	STM	ADC Temp
8	Hall UART Enc Sin/Cos Enc ABI	Hall 1 RX Sin A	5V 3.3V 0V - 5V 5V	STM STM STM STM	Hall 1 UART RX ADC3 Hall 1
9	Throttle	Analog	0V - 5V	STM	ADC1
10	GND	Ground	3A	-	-
11	Indicator R	Input	12V	ESP	IOEXP P03
12	Indicator L	Input	12V	ESP	IOEXP P02
13	Hazard	Input	12V	ESP	IOEXP P10
14[1]	USB D+	USB	3.3V	ESP	P19
15[1]	USB D-	USB	3.3V	ESP	P18
16	GND	Ground	3A	-	-
17	+12VA	Output	12V 3A	STM	AUX1
18		12V Output Input	12V 2A 12V	ESP ESP	IO0 IOEXP P00
19	Indicator L	12V Output Input	12V 2A 12V	ESP ESP	IO1 IOEXP P01
20	+5VA	Power Out	2A	-	-
21	Hall UART Enc Sin/Cos Enc ABI	Hall 2 TX Cos B	5V 3.3V 0V - 5V 5V	STM STM STM STM	Hall 2 UART TX ADC4 Hall 2
22	Brake	Analog	0V - 5V	STM	ADC2
23	GND	Ground	3A	-	-
24	Neutral	Input	12V	ESP	IOEXP P13
25	Cruise	Input	12V	ESP	IOEXP P12
26	Sidestand	Input	12V	ESP	IOEXP P07
27[1]	IO9	Bootloader	3.3V	ESP	P09
28[4]	EN	Power Switch	VBAT	-	-
29[5]	+BATT	Power Out	VBAT 3A	-	-
30	+12VA	Output	12V 3A	STM	AUX1
31	Indicator R	12V Output	12V 2A	ESP	IO2

		Input	12V	ESP	IOEXP P05
32	Brake Light	12V Output Input	12V 2A 12V	ESP ESP	IO3 IOEXP P0
33	+5VA	Power Out	2A	-	-
34	Hall Enc ABI	Hall 3 Index	5V 5V	STM STM	Hall 3 Hall 3
35	PPM/Servo	PWM I/0	5V	STM	PPM
36	GND	Ground	3A	-	-
37	Reverse	Input	12V	ESP	IOEXP P16
38	Mode	Input	12V	ESP	IOEXP P15
39	High Beam	Input	12V	ESP	IOEXP P04

Table 2: Pin-functions of the 39-pin connector

[1]**Warning** This pin connects directly to the CPU and care must be taken to not inject any voltage above 3.3V.
[2]Isolation strength between the CAN-pins and other pins. The voltage between CANH and CANL must not exceed -27V to 40V.
[3]This output has no short circuit protection. Shorting this pin to +BATT or to 12V will permanently damage it.
[4]Connect to +BATT to power up device. When left unconnected the Maxim+ will stay in sleep mode.
[5]**Warning** This pin is connected to the input voltage with a fuse. Connecting this pin to any pin other than EN (28), even just briefly, will permanently damage the device!

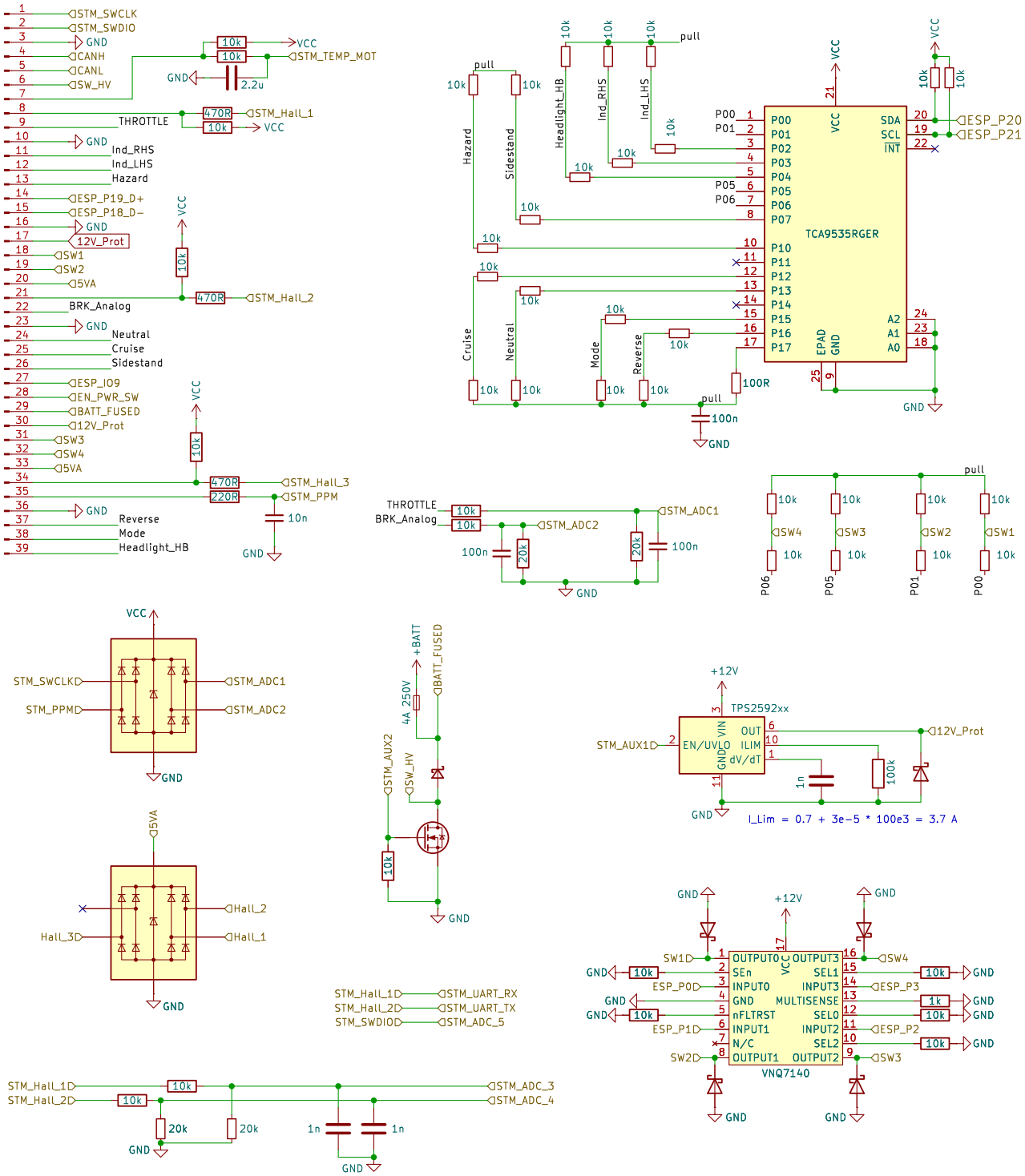

Figure 3: Schematic of the 39-pin connector, its protections and how all functions connect. All labels prefixed with STM_ go to the STM32 and all labels prefixed with ESP_ go to the ESP32.

4.2 Wiring Diagram

WARNING! Do not exceed 4.5N·m when tightening the phase and power connectors. This can cause irreparable damage not covered by the products warranty!

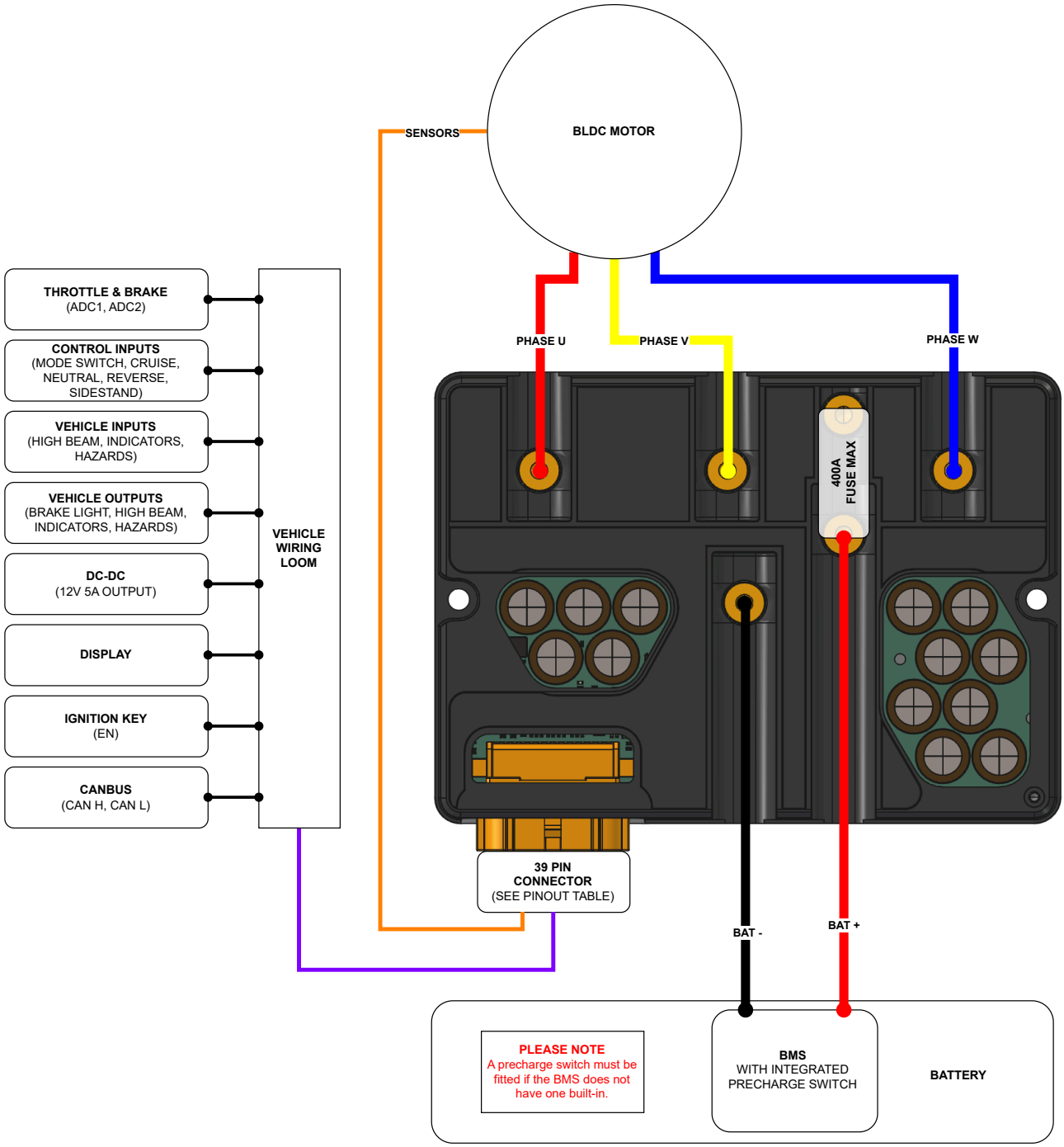

Figure 4: Composite image of VESC Maxim+ with motor, battery and BMS with precharge switch.

4.3 LispBM Extensions

The VESC Maxim+ 150 has the following custom LispBM-extensions on the STM32 for diagnosing the 12V and 5V regulators.

```
(hw-reg-v) ; Read the output voltage of the 12V regulator
(hw-reg-i) ; Read the total current of the 12V regulator
(hw-reg-t) ; Read the temperature of the 12V regulator
(hw-reg5-v) ; Read the output voltage of the 5V regulator
(hw-reg5-en enable) ; Enable or disable the 5V regulator, 1 for enable or 0 for disable
```

5 Device Installation

5.1 Installation Warnings

- **Installation must be performed by qualified personnel** with experience in high-voltage battery systems and VESC-based motor controllers.
- **Read and fully understand all instructions, datasheets, and safety warnings** before beginning installation.
- **Gather all necessary tools and materials** including the device, wiring harnesses, connectors, insulation materials, and personal protective equipment.
- **Ensure the battery pack and motor system are prepared and properly arranged** with correct wiring paths and secure mounting.
- **Securely mount the device using threadlock** in a location protected from vibration, moisture, dust, and direct heat sources.
- **Do not install the device in locations exposed to water, condensation, or flammable materials.**
- **Install motor temperature sensors as required,** in order for the motor protection to ramp down the current smoothly when the motor is about to overheat.
- **Only use manufacturer-specified connectors and cables** to ensure safe and reliable connections.
- **Verify correct polarity for all connections.** Incorrect wiring can cause irreversible damage to the device, battery pack, or connected equipment. **Double-check the wiring diagram before proceeding.**
- **Insulate all exposed terminals and wiring** to prevent accidental short circuits or electric shock.
- **Keep metal objects and tools away from the device and power terminals during installation** to avoid accidental bridging of electrical contacts.
- **Tidy up and secure all cables** with cable ties or routing guides to prevent movement and wear.
- **Do not drill, cut, or modify the device enclosure or circuit board.** Unauthorized modifications may void the warranty and compromise safety or functionality.
- **Double-check all connections and wiring against the provided diagrams** before applying power to the system.
- **When powering up the system for the first time, do so in a controlled environment with appropriate protective equipment.** Be prepared to disconnect power immediately if any abnormal behaviour is observed.

5.2 Mechanical Dimensions

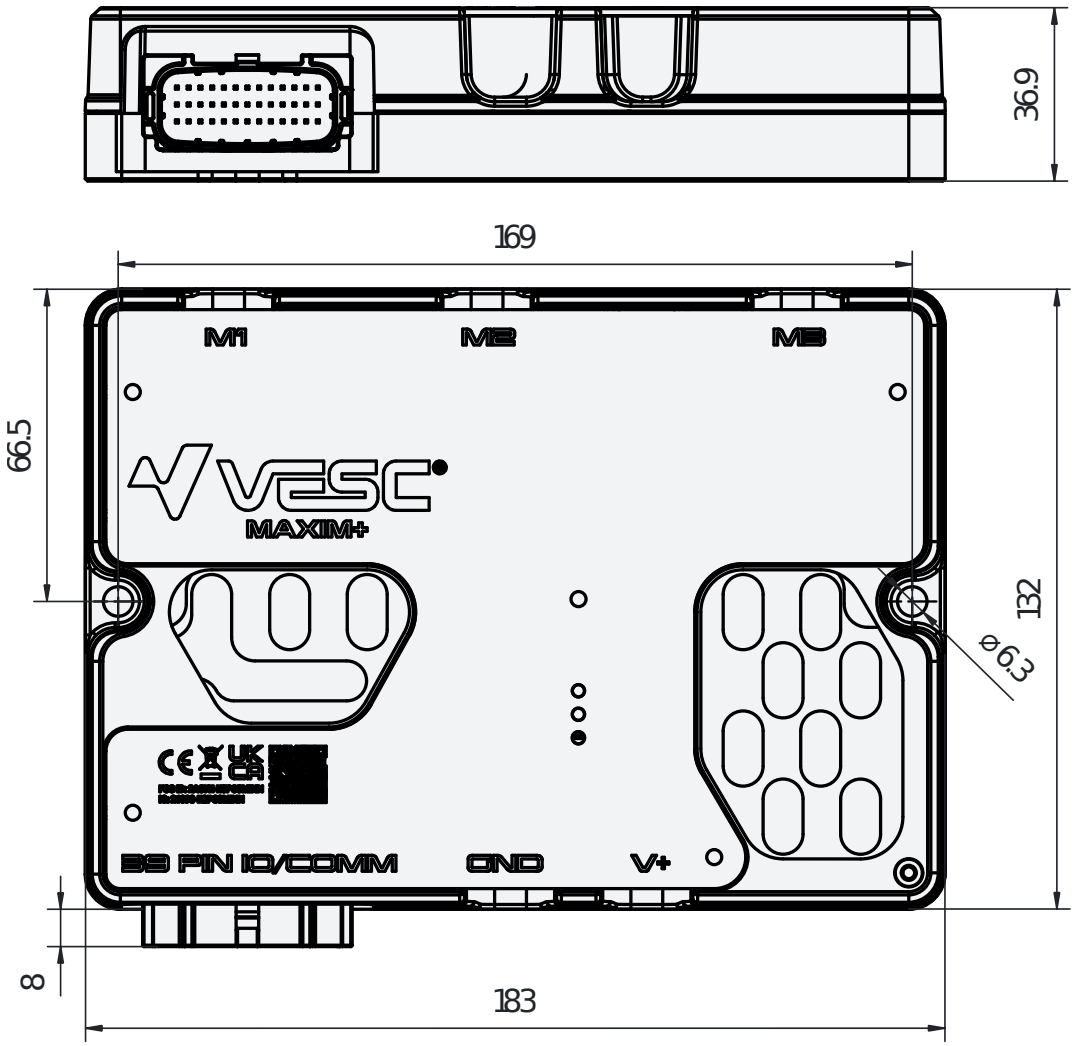

Figure 5: VESC Maxim+ Dimensions shown in mm

6 Configuring the Device

6.1 Configuration Warnings

- **Double-check all wiring connections** before powering on the device. Incorrect wiring can cause damage to the device, battery cells, or pose a fire risk.
- **Avoid ground loops when configuring over USB** by ensuring your laptop or PC is running on battery power if the VESC is powered from a bench power supply. Connecting both devices to mains earth can create a ground loop through the USB cable, which may permanently damage the VESC.
- **Always install the latest version of VESC Tool from the official website** to ensure compatibility with your hardware and access to the newest features, bug fixes, and safety updates. Download the installer from *vesc-project.com/vesc_tool* and follow the on-screen instructions. After installation, update your device firmware if prompted to ensure optimal performance.
- **Do not exceed the recommended voltage limits** for this device, your specific battery or motor system. Setting incorrect voltage thresholds can result in overvoltage errors or undervoltage cutoffs, potentially damaging the system.
- **Do not exceed the recommended current limits** for this device, your specific battery or motor system. Setting incorrect current thresholds can result in overheating or excessive stress on components, which may lead to failure or dangerous conditions.
- **Ensure the motor and any moving parts connected to it are free from obstruction and lifted off the ground before powering on the device.** This prevents unexpected movement that could cause injury, damage, or interference with calibration and configuration procedures
- **Avoid configuring the device in wet or humid environments.** Moisture can cause short circuits and damage sensitive electronic components.
- **If you are unsure about any configuration step, consult the datasheet or seek professional assistance.** Improper configuration can void warranties and lead to hazardous conditions.
- **Wear appropriate personal protective equipment (PPE),** such as safety glasses and gloves, when working with high-voltage systems.

6.2 Connecting the Controller to VESC Tool

The controller can be connected to VESC Tool via USB, Wi-Fi, Bluetooth, or CAN. For instructions on how to connect with and navigate VESC Tool please visit `https://www.vesclabs.com/category/getting-started/`.

1. Connect the controller to VESC Tool using one of the mentioned methods.
2. Ensure the **"Maxim+ 150"** has been selected from the list of CAN devices if you have connected through another device via CAN.

6.3 Using the Motor Setup Wizard

1. On the **Welcome & Wizards** page select the **"Setup Motors FOC"** wizard.
2. Confirm that you want to load default parameters by pressing **"Yes"**.
3. Select the usage which matches closest to your application followed by pressing **"Next"**.
4. Select the size of motor which is connected to the controller followed by pressing **"Next"**.
5. Select the **"Battery Type" from the drop-down list**.
6. Enter the number of **"Battery Cell Series"**.
7. Enter the **"Battery Capacity"** followed by pressing **"Next"**.

8. Select whether the system is direct drive or not.
9. Enter the values of **"Motor Pulley"** and **"Wheel Pulley"** in order to calculate the gear ratio of your system.
10. Enter the number of **"Motor Poles"** which your motor has.
11. Press the **"Run Detection"** button to continue.
12. **Ensure the motor and any moving parts connected to it are free from obstruction and lifted off the ground before running the detection.** This prevents unexpected movement that could cause injury, damage, or interference with calibration and configuration procedures.
13. Confirm whether you want to **detect the motor** connected to the controller or **all of the motors** connected to the controllers via CAN Bus, followed by pressing **"Ok"** to start the detection.
14. Check the detection results are correct for you system followed by pressing **"Continue"**.
15. Check the **motor direction** is correct for you system by pressing the **"FWD"** or **"REV"** buttons. **If the direction is incorrect**, select the **"Inverted"** toggle button to swap the direction of the motor.

6.4 Configuring Motor Current

1. Navigate to the **"General Motor Settings"** section from the menu on the left of the screen (on desktop), or by swiping across the screen on a mobile device.
2. Select the **"Current"** tab at the top of the screen.
   Before proceeding check the limits of your controller and motor.
   Do not exceed the current limits of the controller or motor!
3. Enter the value of **"Motor Current Max"** rated for your motor or application.
4. Enter the value of **"Motor Current Max Brake"** rated for your motor or application.
5. Enter the value of **"Absolute Maximum Current"** rated for the motor or application.
6. Press the **"Write Motor Configuration"** button to write the new configuration to the controller.
7. If **multiple controllers** have been connected via CAN (or a **dual controller**), swap CAN devices and follow steps 1-6 to apply the settings to the other controllers connected.

6.5 Configuring Battery Current

1. Navigate to the **"General Motor Settings"** section from the menu on the left of the screen (on desktop), or by swiping across the screen on a mobile device.
2. Select the **"Current"** tab at the top of the screen.
3. Enter the value of **"Battery Current Max"** rated for your battery or application.
   Battery current max can be calculated from the **maximum output current** of your battery or BMS, divided by how many motors are in the system.
4. Enter the value of **"Battery Current Max Regen"** rated for your battery or application.
   Battery current max regen can be calculated from the **maximum charge current** of your battery or BMS, divided by how many motors are in the system.
5. If multiple controllers have been connected via CAN (or a **dual controller**), swap CAN devices and follow steps 1-4 to apply the settings to the other controllers connected.

6.6 Configuring Inputs

1. On the **Welcome & Wizards** page select the **"Setup Input"** wizard.
2. Press the **"Next"** button which will start scanning for other devices connected via CAN bus.
3. Select the type of input you would like to control the controller.
4. Move the input(s) to the maximum position, including forwards, backwards and centre on bi-directional inputs.
5. Press the **"Apply"** button to map the input.
6. Move the input(s) to the maximum position, checking that the input has been mapped correctly.
7. Select the **"Next"** button to continue.
8. Select the control type for your application from the drop-down list. Please use the "?" icon which explains the difference in control types.
9. Select the **"Next"** button to continue.
10. Select the **"Finish"** button to complete the setup.

7 Product Warranty

7.1 Warranty Coverage

Please find the warranty information regarding VESC Labs products using the following link:
https://www.vesclabs.com/warranty-and-returns-policy/

8 Compliance & Regulatory Information

8.1 CE Marking

This product meets the requirements of all applicable EU directives and regulations and complies with the essential health, safety, and environmental protection requirements as set out in relevant legislation. It is CE marked in accordance with:

- **Directive 2014/30/EU** – Electromagnetic Compatibility (EMC)
- **Directive 2014/35/EU** – Low Voltage Directive (LVD)
- **Directive 2011/65/EU** – Restriction of Hazardous Substances (RoHS)

8.2 UKCA Marking

This product is compliant with UK regulations and bears the UKCA marking, confirming its conformity with the applicable statutory requirements in Great Britain. It meets the relevant provisions of:

- Electrical Equipment (Safety) Regulations 2016
- Electromagnetic Compatibility Regulations 2016
- The Restriction of the Use of Certain Hazardous Substances in Electrical and Electronic Equipment Regulations 2012

8.3 WEEE Directive (2012/19/EU)

This product is compliant with the Waste Electrical and Electronic Equipment (WEEE) Directive. It should not be disposed of with unsorted municipal waste and must be collected separately for proper treatment and recycling. Please contact your local distributor or relevant waste authority for information on recycling options and collection facilities.